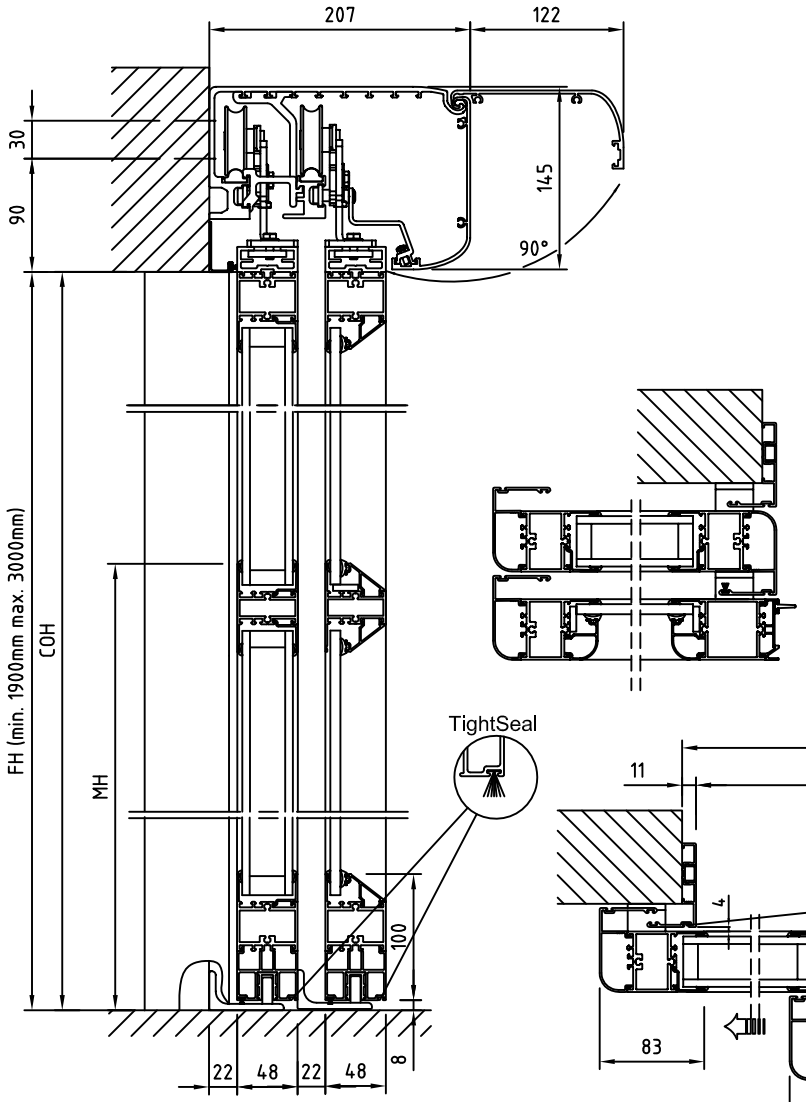

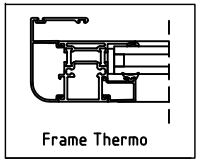

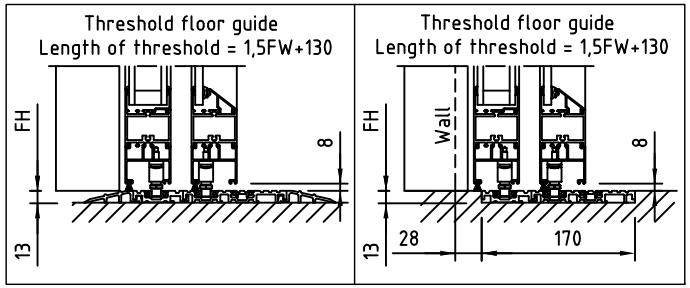

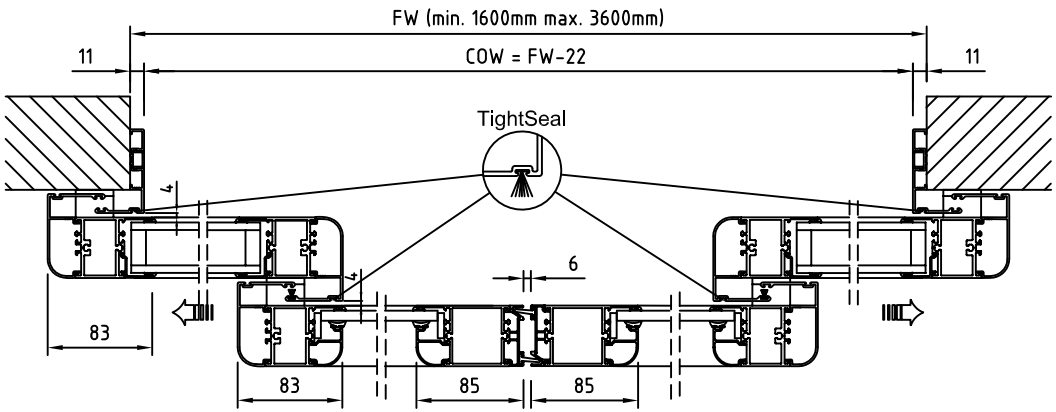

State when ordering

FW=.....mm
FH=.....mm
COW=.....mm
COH=.....mm
☐ Cover
CL=.....mm
☐ Midrail 70
☐ Midrail 150
MH=.....mm
☐ Bottom rail 178
☐ TightSeal
If TightSeal, the floor must be level and not differ more than ± 3 mm

Profile type

☐ Frame
☐ Frame Thermo

Surface treatment

☐ Silver anodized
Special anodized.....
RAL.....
Special powder coating.....
.....

Glass option see drw. 1009026

State glass code:
.....

For all glasses: FW max. 2400 when FH=max

Installation

☐ Floor heating
☐ Other.....

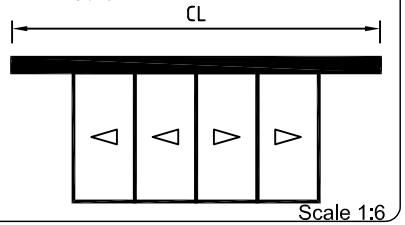

Scale 1:6

Customer:	**Besam ref:**	**ADS Frame telescopic** **4 Panel wall mounted** **Article No. 800152**
Door id:	**Date:**	
Project No:	**Sign:**	

besam ASSA ABLOY

7 | 832984

© All rights in and to this material are the sole property of ASSA ABLOY Entrance Systems AB.
Copying, scanning, alterations or modifications are expressly forbidden without the prior written consent of the applicable company within ASSA ABLOY Entrance Systems AB. Rights reserved for changes without prior notice.